SCALE: 50%

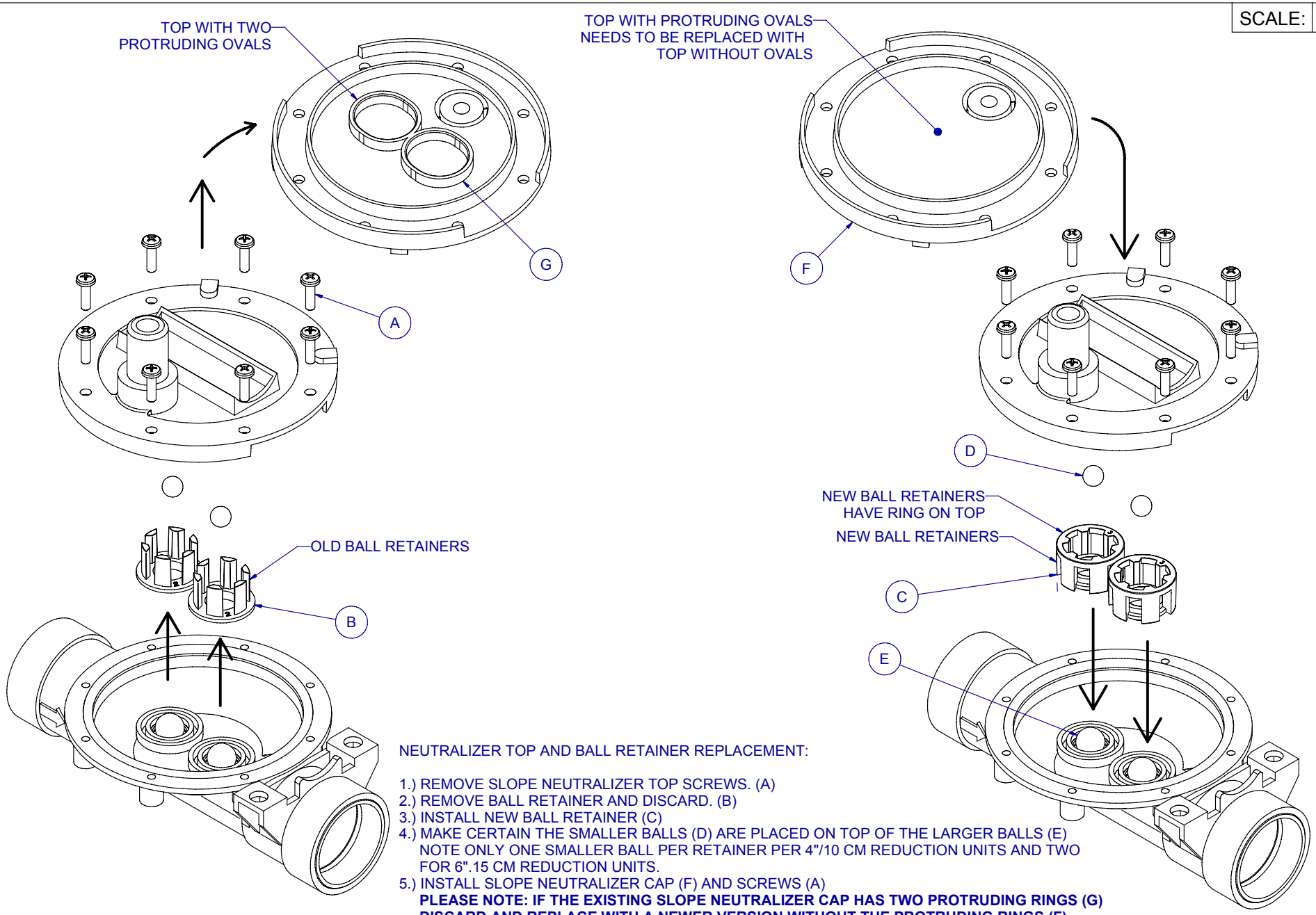

NEUTRALIZER TOP AND BALL RETAINER REPLACEMENT:

1.) REMOVE SLOPE NEUTRALIZER TOP SCREWS. (A)
2.) REMOVE BALL RETAINER AND DISCARD. (B)
3.) INSTALL NEW BALL RETAINER (C)
4.) MAKE CERTAIN THE SMALLER BALLS (D) ARE PLACED ON TOP OF THE LARGER BALLS (E) NOTE ONLY ONE SMALLER BALL PER RETAINER PER 4"/10 CM REDUCTION UNITS AND TWO FOR 6".15 CM REDUCTION UNITS.
5.) INSTALL SLOPE NEUTRALIZER CAP (F) AND SCREWS (A)
PLEASE NOTE: IF THE EXISTING SLOPE NEUTRALIZER CAP HAS TWO PROTRUDING RINGS (G) DISCARD AND REPLACE WITH A NEWER VERSION WITHOUT THE PROTRUDING RINGS (F)

ZIGGITY SYSTEMS INC. WWW.ZIGGITY.COM	FIELD FIX: SLOPE NEUTRALIZER		PART NR.:
	DATE: 1-17-06	REVISION:	GL1058